Single Point Sampler

# SPS

Single Point Sampler

# SPS

## Features & Benefits

The Single Point Sampler provides a means to connect a CM20 or $H_2$Oil to a single pressure test point and balance the differential pressure across the system, to provide a controlled flow of oil into the monitor and away into a waste oil receptacle.

- Lightweight, compact and easy to use design
- Fingertip operated control valve even at high pressures
- 420 bar (6,000PSI) rated
- Facilitates testing from large diameter pipes
- Capability to test up to 500cSt viscosity oils (pressure permitting)
- Pressure compensated flow control mechanism
- Possible to control the valve with the same level of accuracy whether the device is operating at high or low pressure
- Capable of allowing a flow rate in excess of 10ml/min when operating at any viscosity within the product specification
- Suitable for fluid temperatures from +5°C to +80°C (+41°F to +176°F)
- High quality polished finish. (stainless steel/ aircraft grade aluminium)
- Capable of working with a CM20 or $H_2$Oil connected into a system via the standard one metre extension hose kit
- Suitable for use with mineral and biodegradable oils, petroleum based and phosphate ester fluids
- Phosphate ester version utilises the 5/8" BSF HSP style fitting
- Designed so that it meets the lowest possible level of magnetic permeability
- Supplied with accessories kit
- It will maintain the set flow rate between upper and lower limits within a 100 bar inline pressure change
- Clear product identification to ensure that it is connected correctly. (i.e. downstream of the CM20 or $H_2$Oil)

## Connection Instructions

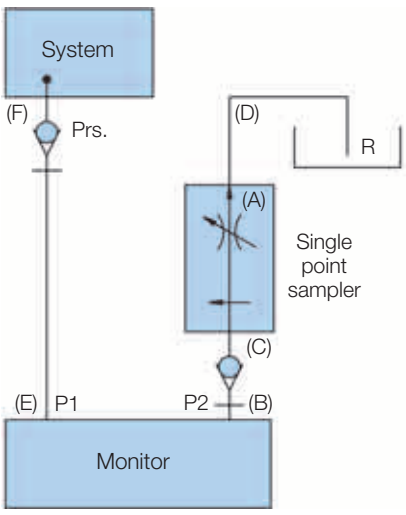


1. Ensure valve is closed (A).
2. Connect P2 on monitor (B) to P2 on Single Point Sampler (SPS) (C).
3. Connect drain line on SPS (D).
4. Connect P1 of monitor (E) to the system (F).
5. The SPS is ready to operate.
6. Open valve (A) slowly until the oil flows continuously from the drainline (D).
7. Switch on monitor and begin testing.

**LCM20 Only**

Carry out flow test as shown in the manual. If test is showing below Δt 3.6°C then carry out test as normal. If, however, test is above Δt 3.6°C then increase oil flow by turning valve (A) anticlockwise and then carry out flow test. Do this until Δt is below 3.6°C and carry out test as normal once this is achieved.

**WARNING! Ensure that SPS valve is closed and monitor is connected to the SPS BEFORE connection to system.**

## Specification

**Fluid compatibility:**
Mineral oil and petroleum based fluids (standard version).
Aggressive fluid (dual seal version) for other fluids consult Parker Hannifin.

**Seals:**
Fluorocarbon or Perfluoroelastomer.

**Maximum working pressure:**
420 bar (6000 psi).

**Weight:**
500 grams max. (Not including hoses).

**Packaging standard:**
Cardboard carton (military usage - plastic carry case).

**Unit size:**
45mm dia x 123mm long.

**System connection:**
Standard - minimess M16 (G1/4" BSP) with cap,
Aggressive - 5/8" BSF HSP.

**Operating temp range:**
+5°C to +80°C (+41°F to +176°F).

**Storage temperature range:**
-26°C to +80°C (-15°F to +176°F).

**Construction:**
Body: Aluminium BS 1470 – pressurised end stainless steel.
Finish: Anodised blue (standard version).
Anodised red (dual seal version).

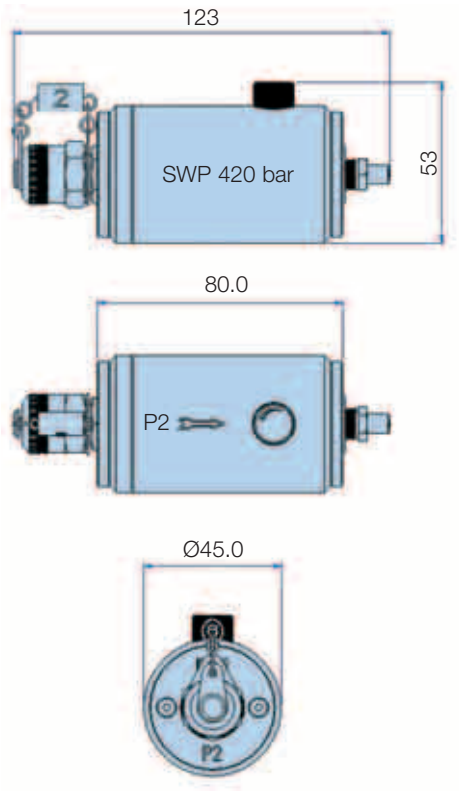


## Ordering Information

**Standard products table**

| Product number | Supercedes | Description |
|---|---|---|
| **SPS2021** | N/A | Mineral single point sampler |
| **SPS2061** | N/A | Aggressive single point sampler |
| **B84784** | B.84.784 | Mineral or aggressive bottle assembly |
| **B84224** | B.84.224 | Mineral oil extension hose/coupling |
| **B84225** | B.84.225 | Aggressive oil extension hose/coupling |
| **B84788** | B.84.788 | Mineral oil waste hose |
| **B84787** | B.84.787 | Aggressive oil waste hose |

Note 1: Part numbers featured with bold highlighted codes will ensure a 'standard' product selection.
Note 2: Alternate displayed part number selection will require you to contact Parker Filtration for availability.