1CE SERIES OVERCENTRE VALVE

ALTERNATIVE BODY ARRANGEMENTS for 30 Litres/min Valves

COMPLETE VALVE 3/8" PORTS

BASIC CODE: 1CE36 / 1CEB36 / 1CER36 / 1CEL36
THROUGH PORTED

Body ONLY part numbers

BSP, aluminium
3/8" B13542
BSP, steel
3/8" B13543

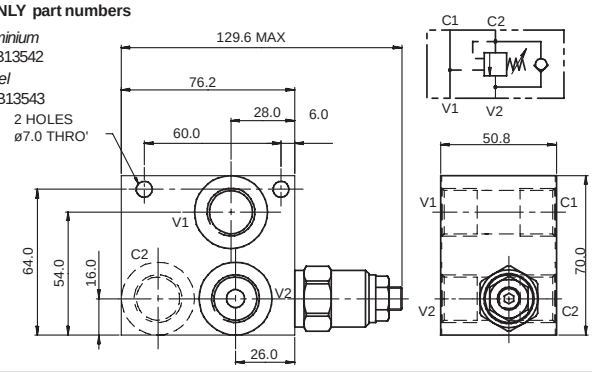

COMPLETE VALVE 3/8" PORTS

BASIC CODE: 1CBE35 / 1CBEB35 / 1CBER35 / 1CBEL35
BANJO MOUNTED

Sub-assembly part numbers

BSP, aluminium
3/8" AXP13617-3W-S

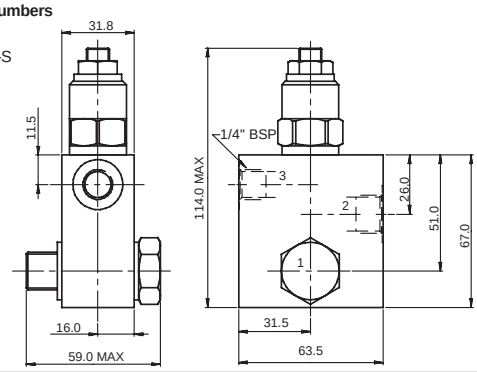

6

COMPLETE VALVE 3/8" PORTS

BASIC CODE: 1CEG35 / 1CEBG35 / 1CERG35 / 1CELG35
GASKET MOUNTED

Sub-assembly part numbers

BSP, aluminium
3/8" BXP13621-3W-S

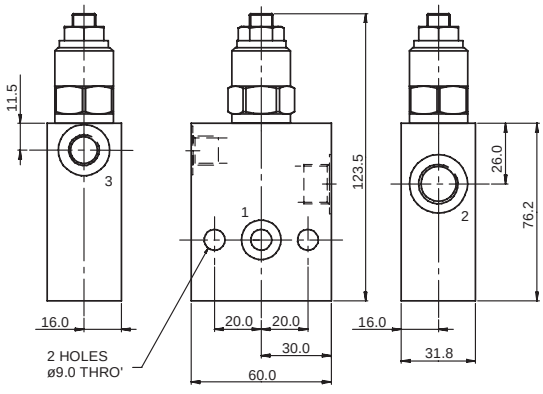

COMPLETE VALVE 3/8" PORTS

BASIC CODE: 1CEE35 / 1CEEB35 / 1CEER35 / 1CEEL35
DUAL OVERCENTRE (INTERNALLY CROSSED PILOTED)

Sub-assembly part numbers

BSP, aluminium
3/8" BXP24147-3W-S

SAE, aluminium
3/8" BXP24147-6T-S

BSP, steel
3/8" BXP24147-3W-S-377

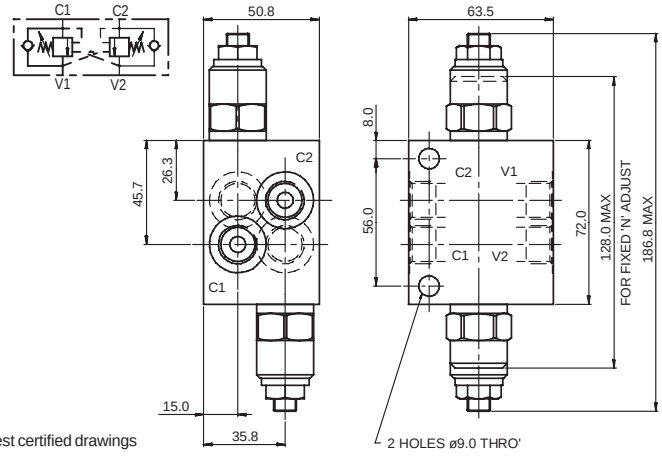

Where measurements are critical request certified drawings

ORDERING CODE EXAMPLE

1C*****	F	3W	35	S	5	230	50

Basic Code
1CE36/1CEB36/1CER36/1CEL36 = Cartridge & Body Thro' Ported
1CBE35/1CBEB35/1CBER35/1CBEL35 = Cartridge & Body Banjo
1CEG35/1CEBG35/1CERG35/1CELG35 = Cartridge & Body Gasket
1CEE35/1CEEB35/1CEER35/1CEEL35 = Cartridges & Dual Body

Adjustment Means
F = Screw Adjustment
N = Fixed - State pressure setting required
For fixed versions add setting in 10 bar increments to end of part number. Subject to a ±10% tolerance.

Port Sizes
3W = 3/8" BSP **6T** = 3/8" SAE

Pressure Range @ 4.8 l/min
35 = 70-350 bar. Std setting 210 bar
Std setting made at 4.8 litres/min

Counterbalance setting
(1CEL30 based options only)
bar in 10 bar increments.

High pressure setting
(1CEL30 based options only)
bar in 10 bar increments.

Pilot Ratio
(omit for 1CEL30 based options)
2 = 2.5:1 **4** = 4:1
5 = 5:1 **10** = 10:1
(See cartridge details)

Seals
S = Nitrile (For use with most industrial hydraulic oils)
SV = Viton (For high temperature and most special fluid applications)

We reserve the right to change specifications without notice